SECTION 34 11 93

TRACK APPURTENANCES AND ACCESSORIES

PART I - GENERAL

1.01 SECTION INCLUDES

A. Rail Fasteners

B. Contact Rail Inserts

C. Rail Lubricators

D. Pedestrian, Cart and Road Crossings and Maintenance Accesses

E. Bollards

1.02 RELATED SECTIONS

A. Section 03 05 15 – Portland Cement Concrete

B. Section 03 15 15 – Elastomeric Bearing Pads

C. Section 03 40 00 – Precast Concrete

D. Section 05 50 00 – Metal Fabrications

E. Section 32 12 16 – Asphalt Paving

F. Section 34 05 17– Common Work Results for Trackway

G. Section 34 11 23 – Special Trackwork

H. Section 34 11 24 – Direct Fixation Track

I. Section 34 11 27 – Ballasted Track

J. Section 34 11 30 – Embedded Track

1.03 MEASUREMENT AND PAYMENT

A. General: Miscellaneous track materials will not be measured separately for payment. All costs in connection therewith will be considered as included in the applicable Contract lump sum or the Contract unit price per linear foot for trackwork of the different types indicated as listed in the bid item in the Bid Schedule of the Bid Form.

1.04 REFERENCES

A. American Society for Testing and Materials (ASTM):

1. ASTM A167 Standard Specification for Stainless and Heat-Resisting Chromium-Nickel Steel Plate, Sheet, and Strip.

2. ASTM A325 Standard Specification for Structural Bolts, Steel, Heat Treated, 120/105 ksi Minimum Tensile Strength.

3. ASTM D4956 Standard Specification for Retroreflective Sheeting for Traffic Control.

1.05 SUBMITTALS

A. Refer to Section 01 33 00 - Submittal Procedures, and Section 01 33 23 - Shop Drawings, Product Data, and Samples, for submittal requirements and procedures.

B. Refer to Section 34 05 17 - Common Work Results for Trackway, for additional submittal requirements.

C. Submit shop and installation drawings of the rail lubrication for each location.

D. Provide additional submittals as required herein.

1.06 RAIL LUBRICATOR TESTING

A. All rail lubricator testing shall be performed with the aid of and entirely witnessed by a representative of the manufacturer.

B. Rail lubricators shall be tested as follows, after 10 train passes, lubricant is present on the gage side of the rail, but not on the top of the rail two hundred feet away from the lubricator location.

1. Rail lubricators shall be as full as possible with lubricant before commencement of testing.

2. Rail lubricators shall be as full as possible with lubricant immediately after completion of testing.

C. The rail shall be cleaned free of all grease, by the Contractor, prior to the beginning of any testing.

D. Upon completion of successful testing the rail shall be cleaned free of all grease, and the lubricator turned off.

E. The Contractor shall provide written certification upon completion of testing. A separate certification shall be provided for each rail lubricator and shall be signed by the manufacturers representative.

PART 2 - PRODUCTS

2.01 DISTRICT-FURNISHED MATERIALS

A. Refer to Section 01 64 13 - District-Furnished Materials and Equipment, of the Contract Specifications for description and quantity of District-furnished materials.

2.02 CONTRACTOR-FURNISHED MATERIALS

A. All products, tools, materials, equipment, and labor required to complete all aspects of the work shall be furnished by the Contractor.

2.03 RAIL FASTENERS

A. District's rail fastener systems are "Designated Matching Products" (DMP) as listed in the BART Facilities Standards Appendices. The system includes clips and where required shoulders, tie pads, and insulators as indicated in the Contract Drawings.

1. Clips shall be forged from alloy steel and quenched to achieve a longitudinal restraint of 2,400 pounds per rail seat. Except at rail joints, as provided for herein, only right-handed rail clips shall be used.

2. The same standard rail clip shall be used in all positions of adjustment.

3. The same insulators shall be used on the field and gage side.

B. Special Rail Clips at Rail Joints

1. Special rail clips shall be used for rail joints and insulated rail joints; right-handed clips shall be used wherever possible; either right or left-handed clips may be used.

2. At insulated rail joints, the rail clips shall not come in contact with any portion of the rail joint, thus helping ensure the integrity of the insulation capability of the joint.

3. Contractor altered rail clips shall not be accepted

C. Rail Seat Design for concrete and resilient ties shall be as indicated in the Standard Drawings.

D. Direct Fixation Fasteners:

1. The rail clips shall be designed to be easily installed and removed by one person with standard, readily available hand tools, but not able to vibrate loose under load. Clip installation and removal shall not damage the fastener body, clip holder, clip, or rail. The rail clip shall not notch nor otherwise damage the rail base during installation or removal.

2. The rail clips shall be held to the metal top element by shoulder aligned with the rail base.

3. Neither the rail clip nor the clip shoulder shall make point contact with the rail. The rail clip contact area with the rail shall not be shorter than one inch measured along the rail and not smaller than 5/32 square inch in area.

4. The clip action in track shall be such that longitudinal rail slippage can occur without denting, carving, or scoring the rail flange and without permanently stressing, bending, twisting, or otherwise damaging the clips, or clip shoulders.

5. The fasteners shall have either stops or visible permanent marks to indicate the proper position to which the spring clips are to be inserted.

6. The fastener shall permit removal of the rail clips so that the rail may be removed by lifting it vertically until it is completely free of the fastener without disturbing the horizontal and vertical alignment of the fastener.

7. The modal frequencies of the spring clip and the metal top element shall be different by such a factor that the spring clip will not vibrate loose from the metal top element.

8. The rail clips shall be held by a clip holder that does not allow lateral rail adjustment on the metal top element.

9. The clip holder shall be a permanent and integral part of the metal top element.

10. The rail clip assembly shall not include any elastomeric components.

11. Direct fixation fasteners shall have two spring rail clips, one on each side of each rail, for securing the running rail to the metal top element of the fastener body.

12. Special Trackwork Direct Fixation Fasteners

    a) Rail clip assemblies for special trackwork rail fasteners may vary from as many as one rail clip assembly on each side of the rail base, or a rail clip assembly opposite an adjustable rail brace, or two opposing adjustable rail braces.

    b) Where rails converge and there is insufficient space between rails for a clip assembly, a bolted clip may be used. Where there is insufficient space for a rail clip assembly, rail stop may be used. In any case there shall be no more than two consecutive fasteners without a rail clip assembly or rail clip.

E. Rail Insulators shall be as indicated in the Standard Drawings.

F. Rail Bearing Pads shall be used beneath the base of the rail on all concrete ties and resilient ties and shall be as indicated in the Standard Drawings.

G. Embedded shoulders shall be ductile cast iron.

2.04 TURNOUT PLATE ANCHORAGE ASSEMBLIES

A. All ties of the same length shall be identical except for the addition of conduits and as follows.

1. Ties supporting switch machines for all turnouts types and derail layouts may be different than ties of the same length used at other locations; however, these ties shall all be identical and work for all switch types, layouts and types of switch machines.

2. Ties supporting auxiliary throwing device may differ from other ties of the same length only by the addition of the anchorage assemblies required for the auxiliary throwing device.

B. A single insulating pad shall be provided under each special plate. Pads shall be the same type and thickness and shall extend at least 1/2-inch beyond the sides and end of the plate.

C. The design of special plates on concrete special trackwork ties shall also include the following:

D. Turnout plates shall be secured to the tie with a minimum of two anchorage assemblies, one on each end of the plate.

E. Each anchorage assembly shall consist of a cast in shoulder, insulator, and clip of the same type used for concrete ties.

F. The design of special plates on resilient special trackwork ties shall include the following.

1. The plate shall be secured to the resilient ties with four anchorage assemblies, two on each end of the plate.

2. Each anchorage assembly shall consist of an anchor bolt, insulating bushing, insulating washer, anchorage insert, lock washer, and flat washer.

3. The anchor bolt shall be threaded into a female-type anchorage insert embedded in the concrete perpendicular to the top of the tie.

4. The anchor bolt shall be capable of being removed and installed, using a socket wrench or vertical bolting machine without removing the rail or rail clips. Anchor bolts that require special tools developed to perform a unique function related to the fastener or require tools not available from commercial sources will not be acceptable.

a. Anchor bolt shall be 7/8 inch, ASTM A325, 9NC, Class 2B.

b. The failure mode for over-tightening bolt shall be bolt breakage.

2.05 INSTALLATION

A. Installation, removal and maintenance of all fasteners, fastener bodies, plates or any component, in all positions of adjustment shall be accomplished without encroachment into the restricted area shown in Figure 1.

2.06 REQUIRED TESTING

A. The various tests required for rail fasteners are not intended to test the DMP rail fastener, but rather to test that they function properly with the devices supplied by the Contractor and that the proper fastening materials are supplied.

B. Waivers of any required tests based upon previous acceptance by the District, shall not be permitted, except as specifically provided herein.

2.07 CONTACT RAIL SUPPORT INSERTS

A. Thread shall be 5/8 inch, 11 UNC, class 2B, minimum engagement length of 1 inch.

B. Each contact rail support insert shall withstand an axial pull-out force of 1,000 pounds without failure.

C. Stainless steel meeting requirements of ASTM A167, Type 304.

D. Inserts manufactured from alternative materials may be used provided they meet the requirements in Articles 2.07 A. and B. herein and can be shown through independent test data to have equal or better resistance to corrosion and lower electrical conductivity.

E. Plastic internal cap plugs shall be furnished and installed in all inserts as soon as possible after manufacture to prevent entry of moisture and debris.

2.08 RAIL LUBRICATORS

A. Rail lubricators shall be installed at locations indicated on the Contract Drawings.

B. Manufacturer's standard model and standard accessories shall be provided, except as modified herein.

C. Manufacturer's standard model and accessories shall be in current use on the BART system or on other transit systems similar to BART.

D. Rail lubricators installation locations shall be equipped with a 10 A/120 V electrical outlet and floodlight with timer switch.

E. Rail lubricators shall be the same manufacturer, type and model throughout.

F. Adjustable metering of grease.

1. Metering of grease shall be adjustable by wheel pass, and,

2. Metering of grease shall be adjustable by volume.

G. Electric gear pump controlled by electric signals from a magnetic wheel detector, including all equipment required for both bi-directional and omni-directional controls.

H. No rail grinding or drilling shall be required to install the wiping bars.

I. Remote "clean hands" grease tank, allowing full maintenance on the pump and mechanisms outside of the grease tank.

J. Provide four single port wiper bars, per track, two each rail.

K. Lubricant used in the rail lubricators will be provided to the Contractor by the Engineer.

2.09 PEDESTRIAN, CART, AND ROAD CROSSINGS AND MAINTENANCE ACCESSES

A. Install pedestrian, cart, and road crossings and maintenance accesses at locations indicated on the Contract Drawings.

B. On all ballasted mainline, spur, and transfer tracks, the design shall be a full depth panel system. The same panel design, size, length and type shall be used throughout.

C. On all direct fixation mainline, spur, and transfer tracks, the design shall be a full depth panel system. The same panel design, size, length and type shall be used throughout.

D. On all yard tracks, the design shall be full depth asphalt concrete paving with continuous rubber flangeway fillers.

E. Requirements.

1. 5 foot 6 inch track gage.

2. 119 RE Rail.

3. No direct fixation to ties or concrete.

4. Flangeway dimensions shall be between 2 1/2 and 3 inches in depth and width.

5. Skid resistant surface.

6. Positive end restraint.

7. 45-degree sloping at end sections.

8. Adaptable for skew crossing and installation on curves.

9. Installable without modification to tie or direct fixation pad spacing, track materials or configuration.

10. Shall provide high dielectric strength when wet with salt water, and shall not interfere with the District's train control or third rail propulsion systems.

F. Concrete Panels

1. Concrete panels and hardware shall conform with Section 03 40 00 - Precast Concrete.

2. Concrete panels shall have lifting swivels with a manufacturer-recommended safe working load capacity of 4,500 pounds.

3. Provide continuous plain elastomer type bearing pads, integral to the crossing panels, conforming to Section 03 15 15 - Elastomeric Bearing Pads.

4. Provide rubber flangeway fillers, integral to the crossing panels manufacturer's standard design.

G. Asphaltic Concrete Paved Road and Pedestrian Crossings

1. Asphaltic Concrete Crossings shall only be used on ballasted track within yards and local control areas, as indicated. The asphaltic paving shall be full depth, without base course and in accordance with a Section 32 12 16 - Asphalt Paving.

2. The installation shall conform with the following requirements.

a. Full depth rubber flangeways.

b. 30-degree slope on end sections.

c. No cold joints.

d. Before placing asphalt concrete, a tack coat (paint binder) shall be applied to all surfaces against which asphalt concrete surfacing will be placed. Tack coat (paint binder) shall be applied in accordance with Section 39-4 of the Caltrans Standard Specifications at the rate of from 0.05 to 0.10 gallon per square yard.

e. The rubber flangeway material shall be tight and uniform against the running rail with no gaps greater than 1/16 inch and shall extend between 3 and 6 inches beyond the adjacent paving.

2.10 BOLLARDS

A. Bollards shall consist of a concrete-filled steel pipe with a concrete foundation.

B. Provide 6 inch, Schedule 40, galvanized steel pipe conforming to the requirements of Section 05 50 00 - Metal Fabrications.

C. Bollards shall extend between 44 and 48 inches above the nearest running rail.

D. Concrete shall comply with applicable requirements of Section 03 05 15 - Portland Cement Concrete. Concrete shall be Class 3000 with 3/4 inch maximum aggregate size.

E. Three 1 inch wide stripes, spaced 6 inches apart, with the first stripe as near as possible to the top of the bollard shall be applied.

F. Reflective tape shall conform to ASTM D4956, Type I, Class 1.

2.11 GENERAL PRODUCTION

A. Production of miscellaneous track materials or components prior to the Engineer's review and approval is prohibited.

B. Manufacture all miscellaneous track materials using the same methods used to produce qualification test pieces.

PART 3 - EXECUTION

3.01 INSTALLATION

A. Install miscellaneous track materials in accordance with the respective manufacturer's recommended installation instructions and procedures and as provided, except as modified herein.

B. Install miscellaneous track materials in accordance with the requirements of Section 34 05 17 - Common Work Results for Trackway.

3.02 BOLLARDS

A. Provide bollards to protect the ends of third rail sections at pedestrian, cart and road crossings and maintenance accesses and as indicated.

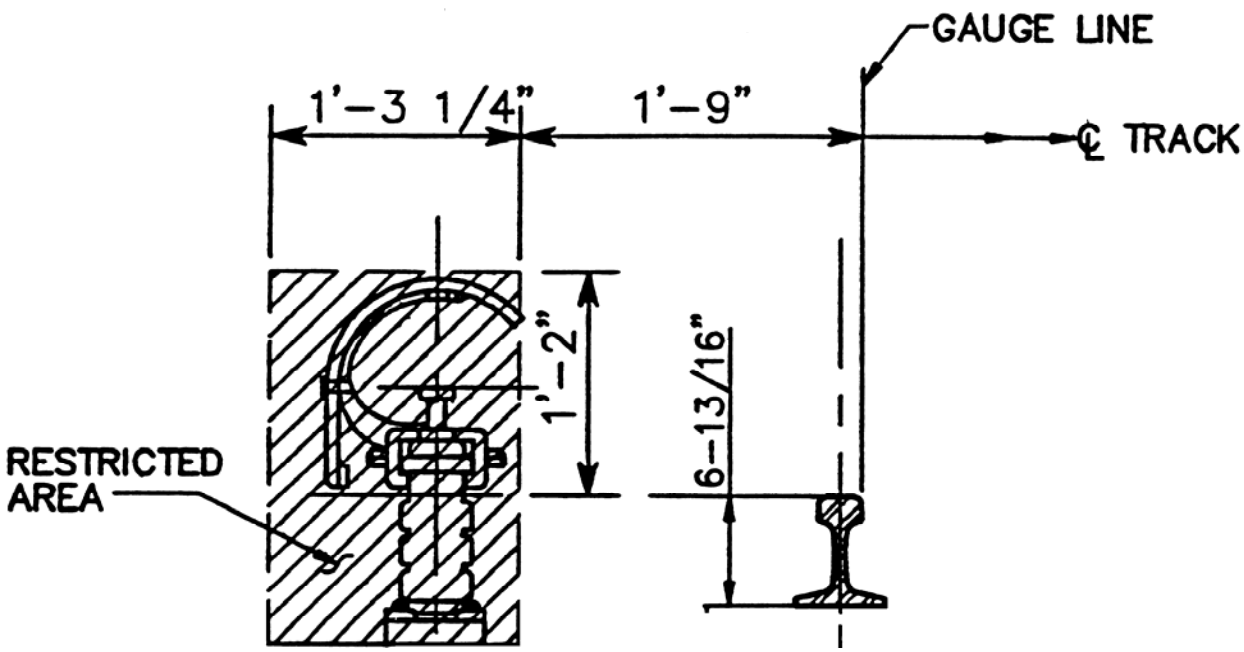

FIGURE 1
RESTRICTED AREA DURING FASTENER INSTALLATION AND MAINTENANCE

END OF SECTION 34 11 93